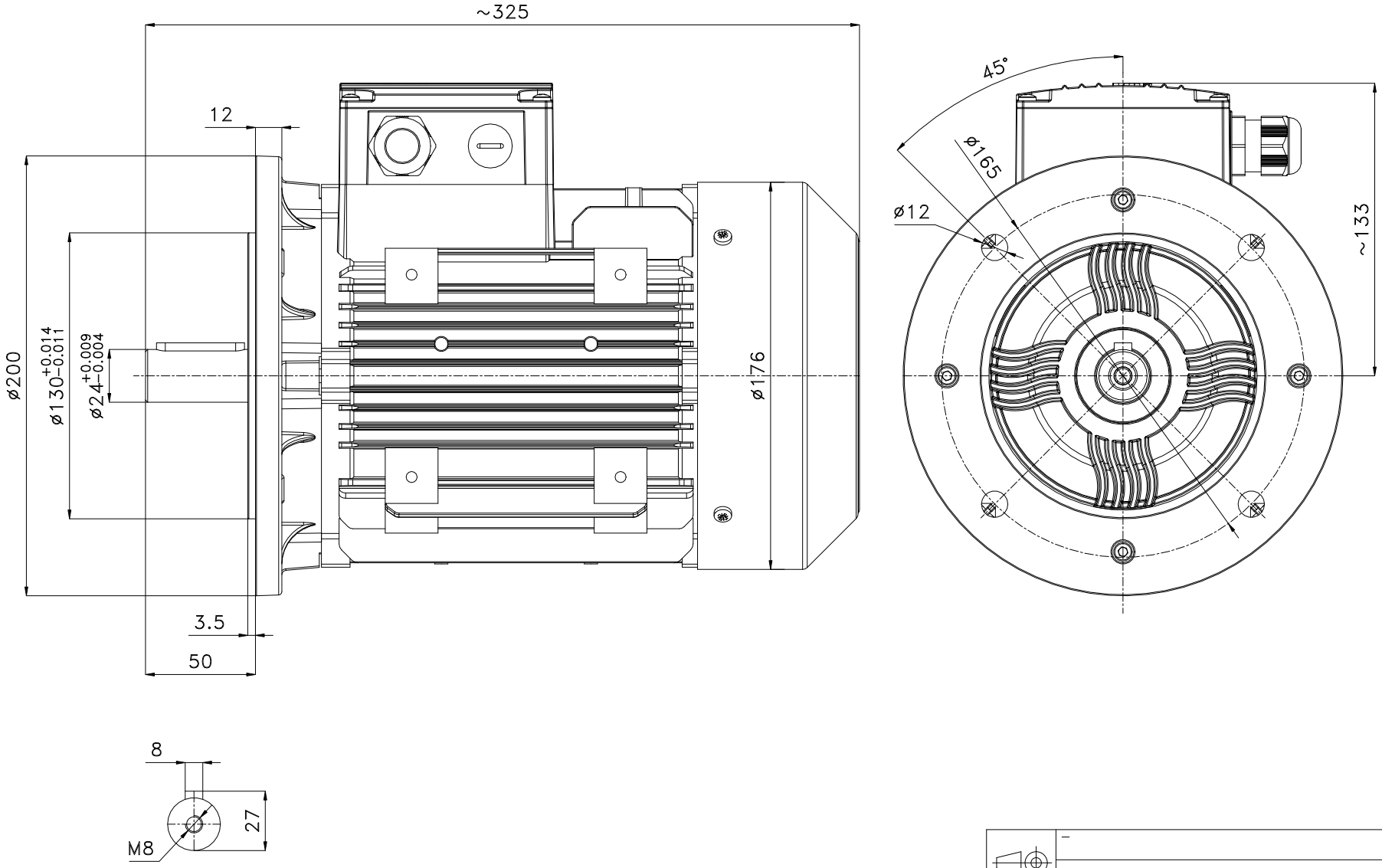

Unit	mm
Date	30/04/2017

3EL090LXX-FA

LSMotion

www.lsmotion.fr

This outline drawing is subject to change